ShiLing®

ZHEJIANG SHILING SEMICONDUCTOR CO.,LTD.

Specifcation of products

：

：MDST150A-H4

ZHEJIANG SHILING SEMICONDUCTOR CO.,LTD.

0578 3012571 3615078

0578 3611180

323000

E-mail:smrshiling01@163.com

Http//www.smrshiling.com

05 2023.8

ShiLing®

ZHEJIANG SHILING SEMICONDUCTOR CO.,LTD.

Three Phase Bridge + Thyristor

V_{RRM} / V_{DRM} 800 to 1800V
I_{FAV}/ I_{TAV} 150A

Circuit

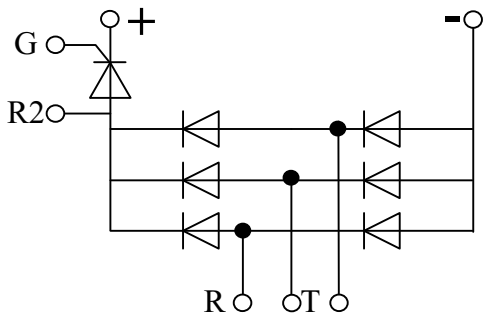

Features

- Blocking voltage:800 to 1800V
- Three Phase Bridge and a Thyristor
- Low Forward Voltage

Applications

- Inverter for AC or DC motor control
- Current stablilzed power supply
- Switching power supply

Module Type

TYPE	V_{RRM}/ V_{DRM}	V_{RSM}
MDST150A800VH4	800V	900V
MDST150A1200VH4	1200V	1300V
MDST150A1600VH4	1600V	1700V
MDST150A1800VH4	1800V	1900V

◆Diode

Maximum Ratings

Symbol	Item	Conditions	Values	Units
I_D	Output Current(D.C.)	Tc=93℃ Three phase full wave	150	A
I_{FSM}	Surge forward current	t=10mS Tvj =45℃	1500	A
i^2t	Circuit Fusing Consideration		11250	A^2s
Visol	Isolation Breakdown Voltage(R.M.S)	a.c.50HZ;r.m.s.;1min	3000	V
Tvj	Operating Junction Temperature		-40 to +150	℃
Tstg	Storage Temperature		-40 to +125	℃
Mt	Mounting Torque	To terminals(M4)	2±5%	Nm
Mt		To terminals(M6)	5±15%	Nm
Ms		To heatsink(M6)	5±15%	Nm
Weight		Module（Approximately）	320	g

Thermal Characteristics

Symbol	Item	Conditions	Values	Units
$R_{th(j-c)}$	Thermal Impedance, max.	Junction to Case(TOTAL)	0.14	℃/W
Rth(c-s)	Thermal Impedance, max.	Case to Heat sink	0.07	℃/W

Electrical Characteristics

Symbol	Item	Conditions	Values	Units
V_{FM}	Forward Voltage Drop, max.	T=25℃ I_F =150A	1.30	V
I_{RRM}	Repetitive Peak Reverse Current, max.	T_{vj} =25℃ V_{RD}=V_{RRM} T_{vj} =150℃ V_{RD}=V_{RRM}	≤2 ≤10	mA mA

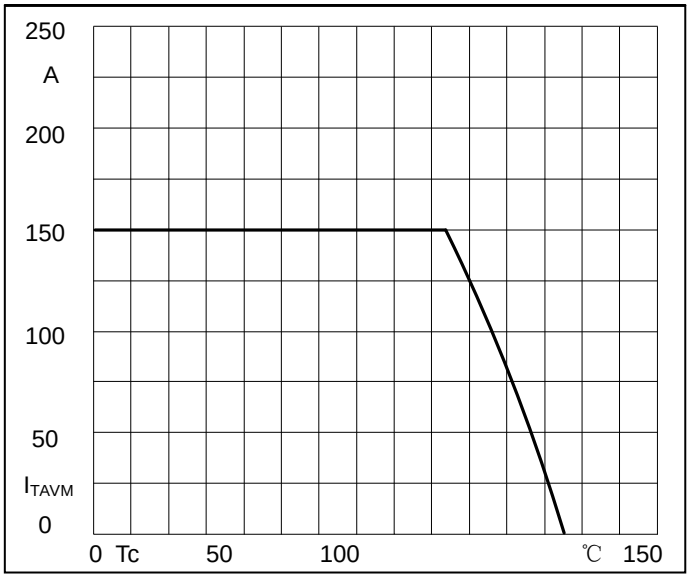

Fig7. SCR Forward Current Derating Curve

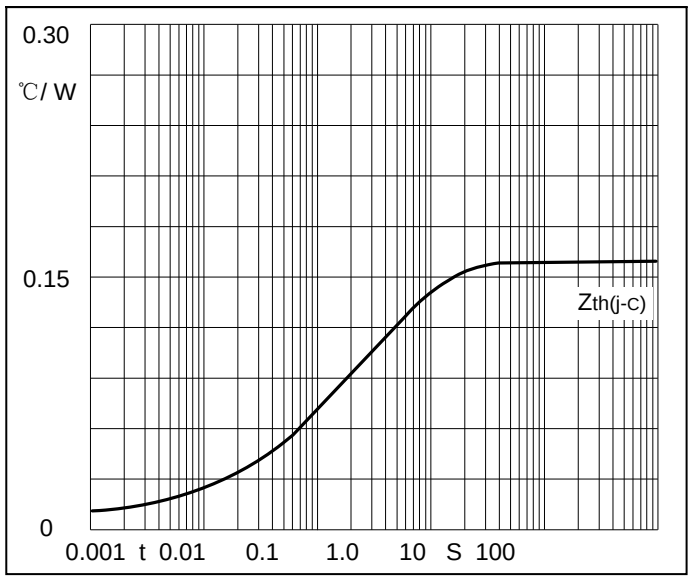

Fig8. SCR Transient thermal impedance

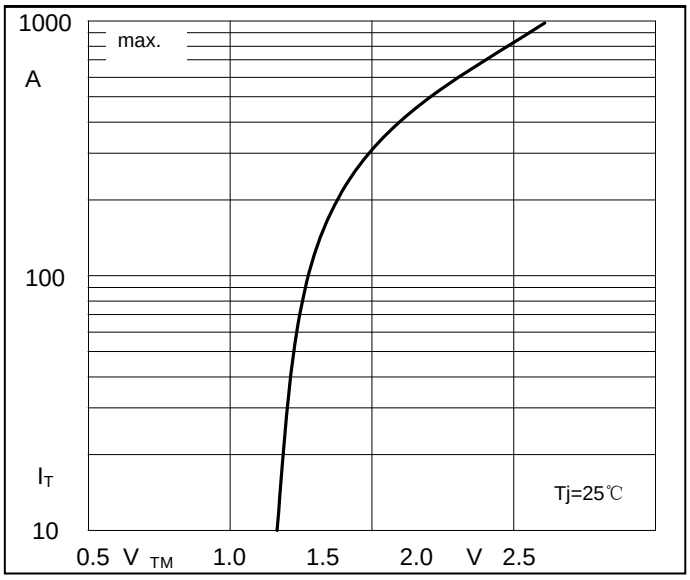

Fig9. SCR Forward Characteristics

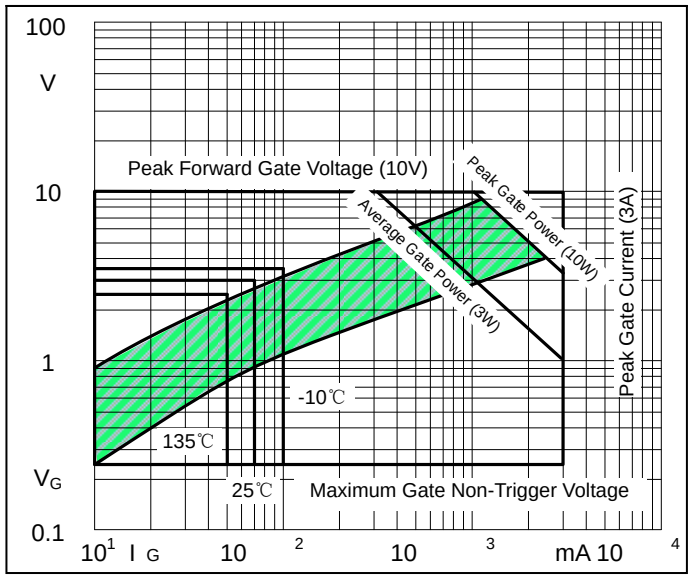

Fig10. Gate trigger Characteristics