ShiLing®

ZHEJIANG SHILING SEMICONDUCTOR CO.,LTD.

> ? @ A B

Specifcation of products

> ? C D E F G H I J

> ? l m E *-+__X%bYXXno/X]

3 4 5 6 7 8 9 : ; < =

!"#$%&' (!$)$&' ("*$+,&-.+/,0 +,12)/-1

K L M 3 4 N O P Q R S T

c d M W XYZ[\ ]X_bYZ_]^_YXZ[

U V M W XYZ[\ ]^___[X

` a M]b]XXX

"ou~xyEtuvtwxyxz{X_ _^]1|}u

!ppqrrsss1tuvtwxyxz{1|}u

e f	i j	j k
¤ ¥ £	¡ ¢ £	g h

¦ § m M XY ¨ © ª « M bXb]1[

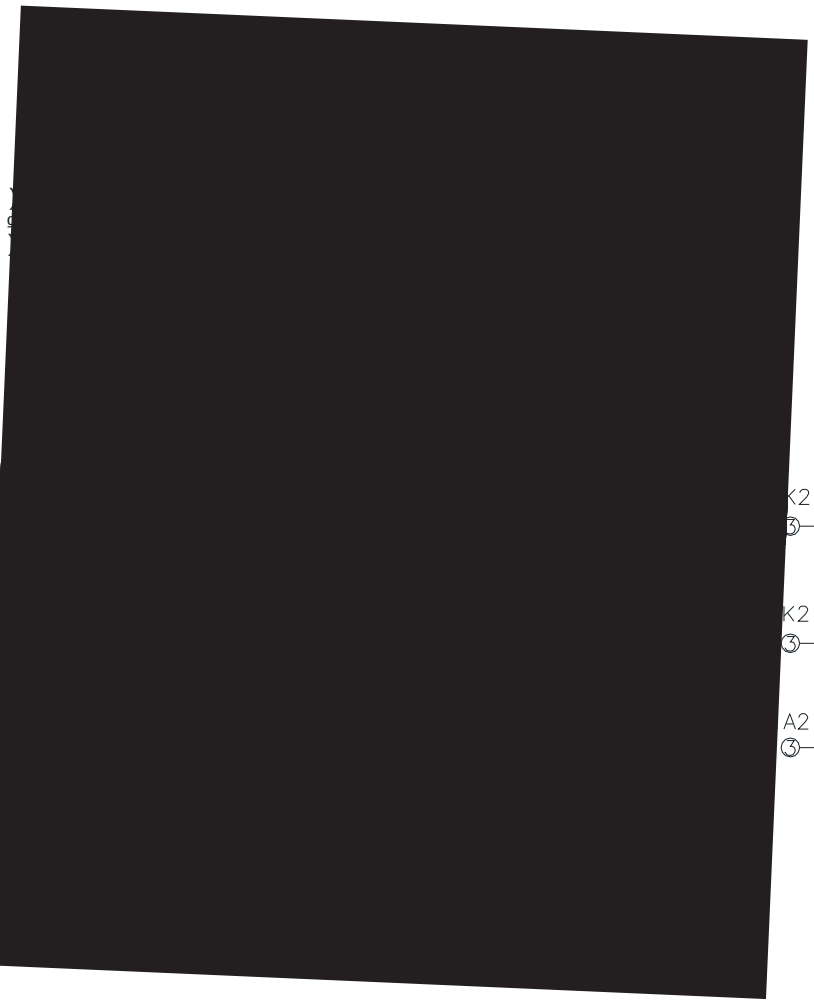

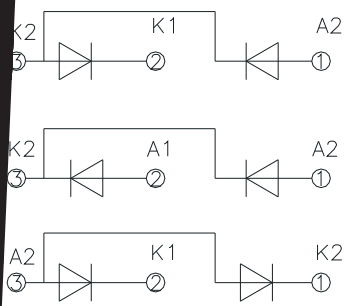
K2
K1
A2
③
②
①
K2
A1
A2
③
②
①
A2
K1
K2
③
②
①

Outside Dimension

