SHI LING® 浙江世菱半导体有限公司
ZHEJIANG SHILING SEMICONDUCTOR CO.,LTD.

Specifcation of products

：

：MURP400200CT

ZHEJIANG SHILING SEMICONDUCTOR CO.,LTD.

0578 3615066
323000
E-mail:smrshiling12@163.com
Http//www.smrshiling.com

02 2026.5

Ultra -Fast Soft Recovery Diode Module

MURP400200CT

Description

Ultra-FRD module devices are optimized to reduce losses and EMI/RFI in high frequency power conditioning electrical systems. These diode modules are ideally suited for power converters, motors drives and other applications where switching losses are significant portion of the total losses.

Features

☞ Repetitive Reverse Voltage : V

ThermalCharacteristics

Symbol	Parameter	Conditions	Values			Unit
			Min.	Typ.	Max.	
$R_{th(j-c)}$	Thermal Resistance	Junction to Case	-	-	0.10	℃/W

ElectricalCharacteristics @T_j =25℃ (unless otherwise specified)

Symbol	Parameter	Conditions		Values			Unit
				Min.	Typ.	Max.	
V_R	Cathode Anode Breakdown Voltage	I_R= 100uA		100	-	-	V
V_{FM}	Maximum Forward Voltage	I_{FM}= 300A, T_c= 25℃		-	1.0	1.1	V
		I_{FM}= 300A, T_c=100℃		-	0.7	0.8	V
I_{RRM}	Repetitive Peak Reverse Current	T_C= 100℃ , V_{RRM} applied		-	-	10.0	mA
t_{rr}	Reverse Recovery Time	I_{FM}= 300A, V_R= 150V di/dt=-100A/us	T_C= 25℃	-	95	100	ns
			T_C= 100℃	-	100	-	ns

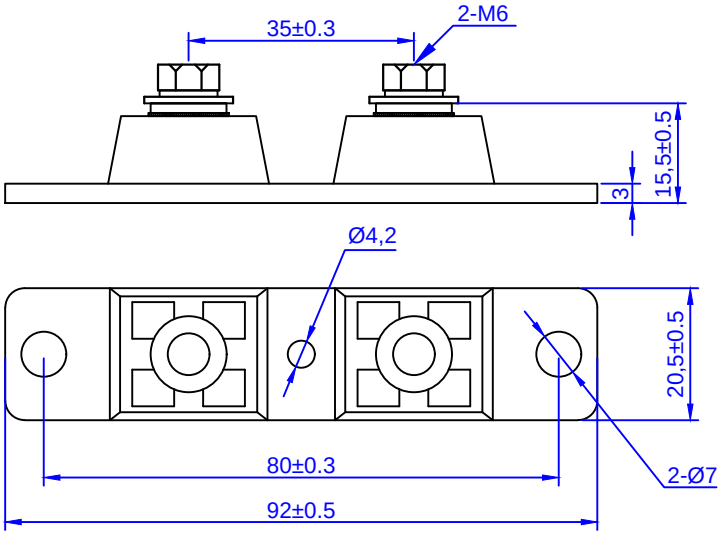

Performance Curves

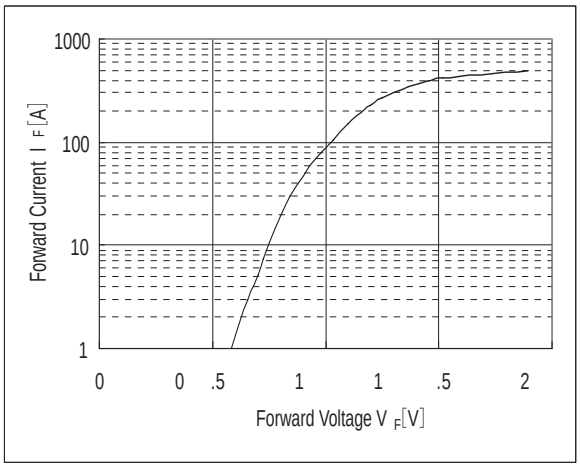

Fig. 1 : Typical Forward Voltage Drop vs. Instantaneous Forward Current

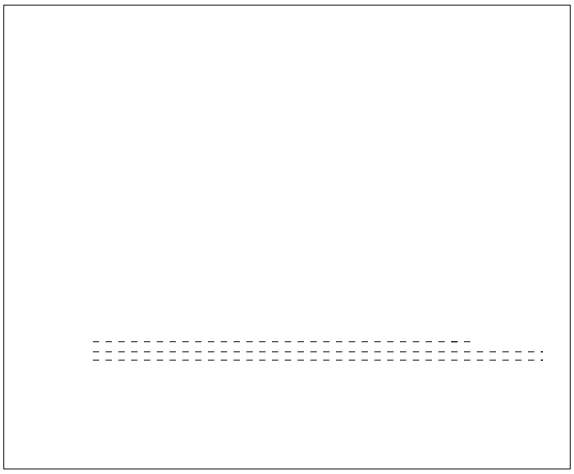

Fig. 2 : Typical Reverse Recovery Time vs. -di/dt