Specifcation of products

ﮋ ﮊ ﮋ : 刀

ﮋ ﮊ گ : MURP500100CI

ﮏ ﮎ ﮏ ﮐ ﮑ
ZHEJIANG SHILING SEMICONDUCTOR CO.,LTD.

ﮊ ﮋ ﮌ
ﮊ Є 0578 S 3615066
ﮊ 323000
E-mail:smrshiling12@163.com
Http//www.smrshiling.com

ﮐ		8
	ﮒ ﮓ	▫

گ ﮊ 02 ﮊ 2026.5

SHI LING® 浙江世菱 体有限公司
ZHEJIANG SHILING SEMICONDUCTOR CO.,LTD.

Ultra-Fast Soft Recovery Diode Module

MURP500100CI

Description

Ultra-FRD module devices are optimized to reduce losses and EMI/RFI in high frequency power conditioning electrical systems. These diode modules are ideally suited for power converters, motors drives and other applications where switching losses are significant portion of the total losses.

Features

- ☞ Repetitive Reverse Voltage : V_{RRM} = 100V
- ☞ Low Forward Voltage Drop : V_F (typ.) = 1.0V
- ☞ Average Forward Current : $I_{F(AV.)}$ = 500A @ Tc= 100 ℃
- ☞ Ultra-Fast Reverse RecoveryTime : t_{rr} (typ.) = 95 ns
- ☞ Extensive Characterization of Recovery Parameters
- ☞ Reduced EMI and RFI
- ☞ Non Isolation Type Package

Applications

Motor Drives, Free wheel use, High Power Converters, Welders, Various Switching and Telecommunication Power Supply

Equivalent Circuitand Package

Equivalent Circuit

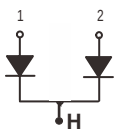

Package

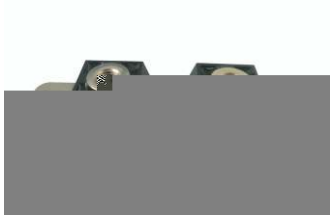

Please see the package Out line information

Absolute Maximum Ratings @ T_j=25℃(PerLeg)

Symbol	Parameter	Conditions	Ratings	Unit
V_{RRM}	Repetitive Peak Reverse Voltage		100	V
$V_{R(DC)}$	Reverse DC Voltage		100	V
$I_{F(AV)}$	Average Forward Current @ Tc=25℃ @ Tc = 100℃	Resistive Load	500 420	A A
I_{FSM}	Surge(non-repetitive) Forward Current	One Half Cycle at 60Hz, Peak Value	4600	A
I^2t	I^2t for Fusing	Value for One Cycle Current, t_W= 8.3ms T_j= 25℃Start	$56.4 * 10^3$	A^2 s
T_j	JunctionTemperature		-40 ~ 125	℃
T_{stg}	StorageTemperature		-40 ~ 125	℃
P_d	Maximum Power Dissipation		820	W
-	Mounting Torque		4.0	N.m
-	Terminal Torque		3.0	N.m

Thermal Characteristics

Symbol	Parameter	Conditions	Values			Unit
			Min.	Typ.	Max.	
$R_{th(j-c)}$	Thermal Resistance	Junction to Case	-	-	0.22	℃/W

Electrical Characteristics @T_j=25℃ (unless otherwise specified)

Symbol	Parameter	Conditions		Values			Unit
				Min.	Typ.	Max.	
V_R	Cathode Anode Breakdown Voltage	I_R= 100uA		100	-	-	V
V_{FM}	Maximum Forward Voltage	I_{FM}= 300A, T_c= 25℃		-	1.0	1.1	V
		I_{FM}= 300A, T_c=100℃		-	0.8	1.0	V
I_{RRM}	Repetitive Peak Reverse Current	T_C = 100℃, V_{RRM} applied		-	-	5.0	mA
t_{rr}	Reverse Recovery Time	I_{FM}= 300A, V_R= 100V di/dt=-100A/us	T_C= 25℃	-	95	100	ns
			T_C= 100℃	-	180	-	ns

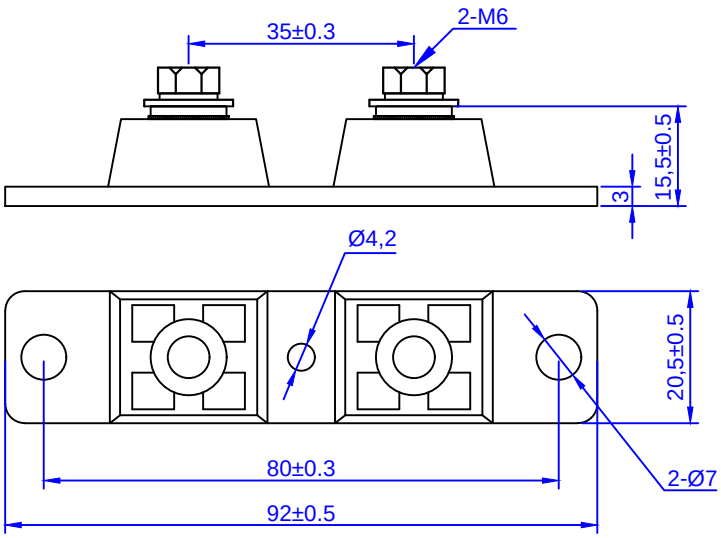

Performance Cu rves

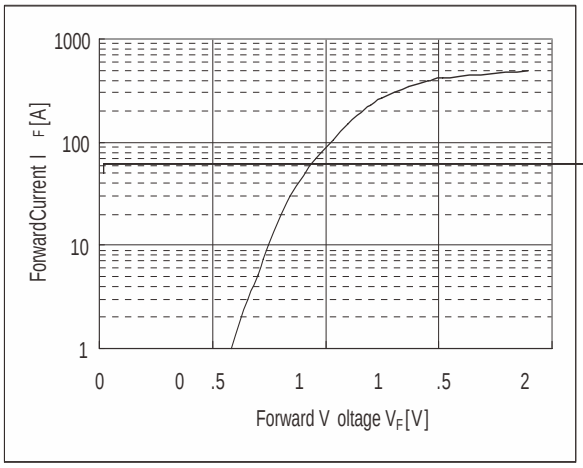

Fig. 1 : Typical Forward Voltage Drop vs. Instantaneous Forward Cur rent

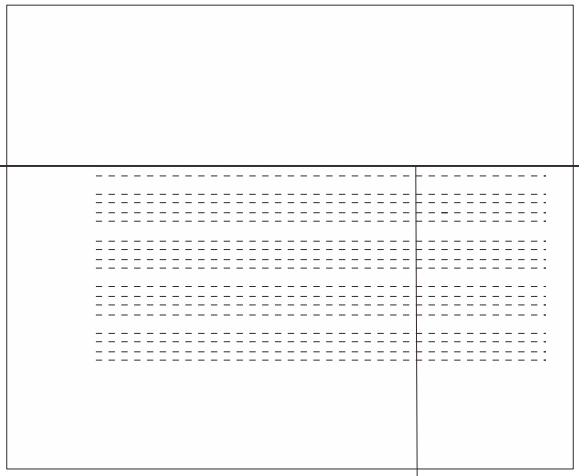

Fig. 2 : Typical Reverse Recovery Time vs. -di/dt