SHI LING® 浙江世菱半导体有限公司
ZHEJIANG SHILING SEMICONDUCTOR CO.,LTD.

Specifcation of products

：

：MUK400400CIT26

ZHEJIANG SHILING SEMICONDUCTOR CO.,LTD.

0578 3615066
323000
E-mail:smrshiling12@163.com
Http//www.smrshiling.com

02 2026.5

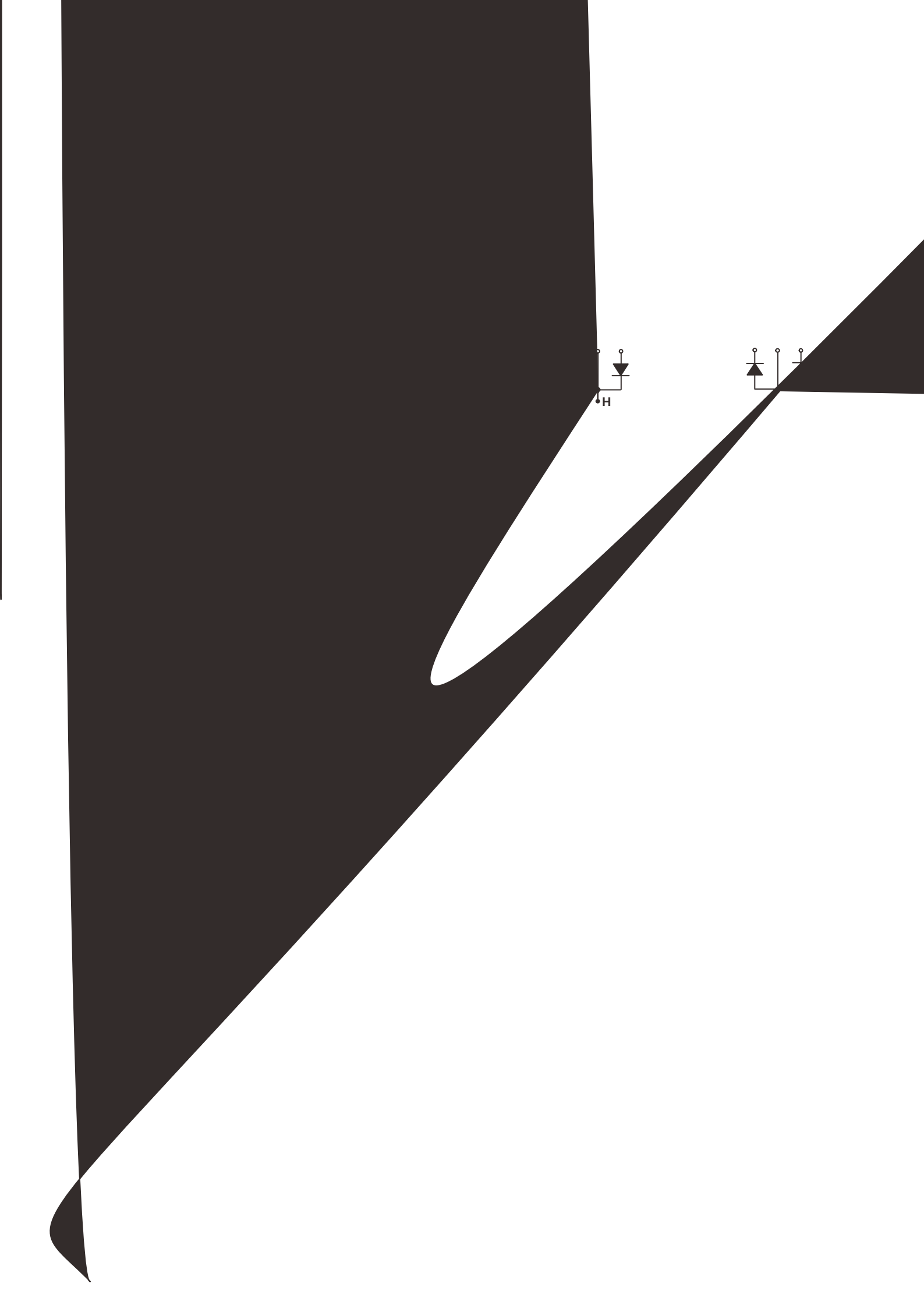
H

ThermalCharacteristics

Symbol	Parameter	Conditions	Values			Unit
			Min.	Typ.	Max.	
$R_{th(j-c)}$	ThermalResistance	Junctionto Case	-	-	0.13	/W

Electrical Characteristics @ T_j=25 (unless otherwise specified)

Symbol	Parameter	Conditions	Values			Unit
			Min.	Typ.	Max.	
V_R	CathodeAnodeBreakdown Voltage	I_R= 100uA	400		-	V
V_{FM}	Maximum Forward Voltage	I_{FM}= 400A, T_c= 25	-		1.3	V
		I_{FM}= 400A, T_c=100	-		0.8	V
I_{RRM}	Repetitive Peak Reverse Current	T_C= 100 , V_{RRM} applied	-		8.5	mA
T_{rr}	Reverse RecoveryTime	I_{FM}= 400A, V_R= 400V di/dt=-100A/us	T		-	ns
					-	ns

4( )* -)* / (

Fig. 2 : Typical Reverse Recovery Time vs. -di/dt

Outside Dimension

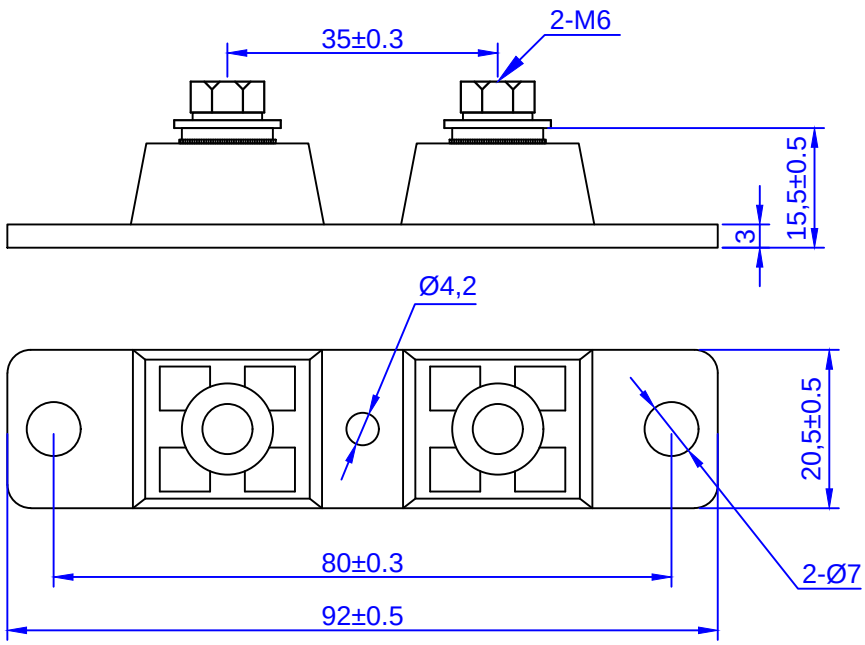

Dimensions (mm)

