SHI LING® 浙江世菱半导体有限公司
ZHEJIANG SHILING SEMICONDUCTOR CO.,LTD.

Specifcation of products

MURP60060CT

ZHEJIANG SHILING SEMICONDUCTOR CO.,LTD.

0578 3615066
323000
E-mail:smrshiling12@163.com
Http//www.smrshiling.com

02 2026.5

Ultr -F t Soft R cov r y D od Mod l

D cr pt on

Ultra-FRD module devices are optimized to reduce losses
and EMI/RFI in high frequency power conditioning electrical systems.
These diode modules are ideally suited for power converters,
motors drives and other applications where switching losses
are significant portion of the total losses.

F t r

- ☞ Repetitive Reverse V oltage : V_{RRM} =60V
- ☞ Low Forward V oltage Drop : V_F(typ.) = 0.9V
- ☞ Average Forward Cur rent : $I_{F(AV.)}$ = 600A @ Tc= 125℃
- ☞ Ultra-Fast Reverse Recovery Time : t_{rr}(typ.) = 65 ns
- ☞Extensive Characterization of Recovery Parameters
- ☞Reduced EMI and RFI
- ☞Non Isolation Type Package

Appl c t on

Motor Drives, Free wheel use, High Power Converters, Welders,
Various Switching and Telecommunication Power Supply

Ab ol t M x m m R t ng @ T_j =25℃(Per Leg)

Symbol								

Thermal Characteristics

Symbol	Parameter	Condition	Value			Unit
			Min.	Typ.	Max.	
$R_{th(j-c)}$	Thermal Resistance	Junction to Case	-	-	0.10	℃/W

Electrical Characteristics @ T_j=25℃ (unless otherwise specified)

Symbol	Parameter	Condition		Value			Unit
				Min.	Typ.	Max.	
V_R	Cathode Anode Breakdown Voltage	I_R= 100uA		100	-	-	V
V_{FM}	Maximum Forward Voltage	I_{FM}= 600A, T_c= 25℃		-	0.9	1.0	V
		I_{FM} = 600A, T_c=100℃		-	0.7	0.8	V
I_{RRM}	Repetitive Peak Reverse Current	T_C= 100℃, V_{RRM}applied		-	-	10.0	mA
t_{rr}	Reverse Recovery Time	I_{FM}= 300A, V_R= 150V di/dt=-100A/us	T_C= 25℃	-	65	70	ns
			T_C= 100℃	-	100	-	ns

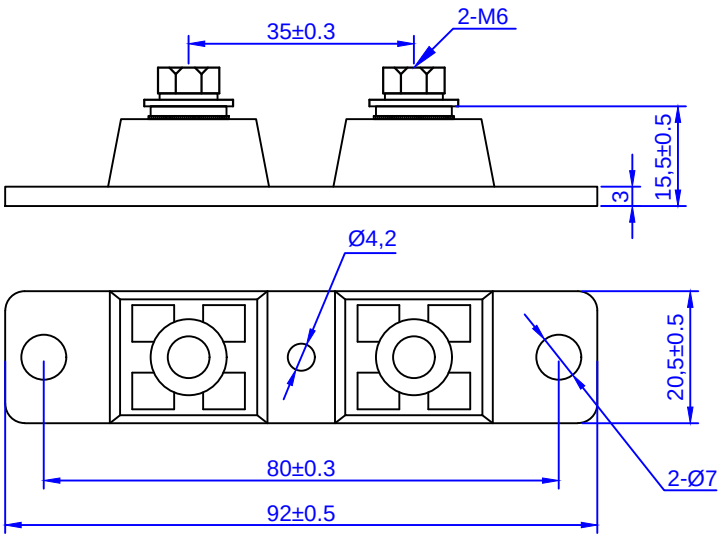

Performance Curves

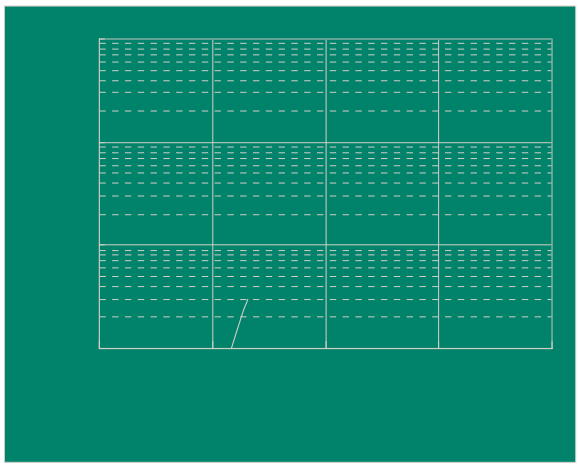

Fig. 1: Typical Forward Voltage Drop vs. Instantaneous Forward Current

Fig. 2: Typical Reverse Recovery Time vs. -di/dt